Technical Brief:
Solving ACR / Multi-Program Multi-Output Charger Interference

There may be interference between the output of multi-program multi-output chargers and normal ACR performance. For a discussion of these interference issues, click: Applications of ACR and Multi-Programmable Multi-Output Chargers. When using multi-program multi-output chargers, it may be necessary to disconnect the ACR when the shore charger is on. There are two ways to disconnect the ACR during charging:

- Install a switch and manually disconnect the ACR so that it does not combine battery banks when it senses a charge on one battery bank. See instructions for the ACR you are using, but all ACR's can be disabled by disconnecting the negative connection.

- Automatically disconnect the ACR. This is illustrated in the circuit diagram below. Connect the coil of a relay to the same circuit used to power the charger. Choose a relay with a coil rating according to the AC source, usually 120V AC in the USA. This could be through a circuit breaker that is used to connect the charger. Connect the negative connection of the ACR through the "Normally Closed" (NC) contacts of the relay. When power is applied to the charger and the relay, the relay opens, and disconnects the ACR. A suitable relay is Z959-ND from DigiKey, Omron part number G48-112T1CUS-AC120. This is a single pole/double throw relay, so one side is normally closed. The ACR will function normally when there is no AC supplied to the charger, and when another charging source, such as the alternator, is working.

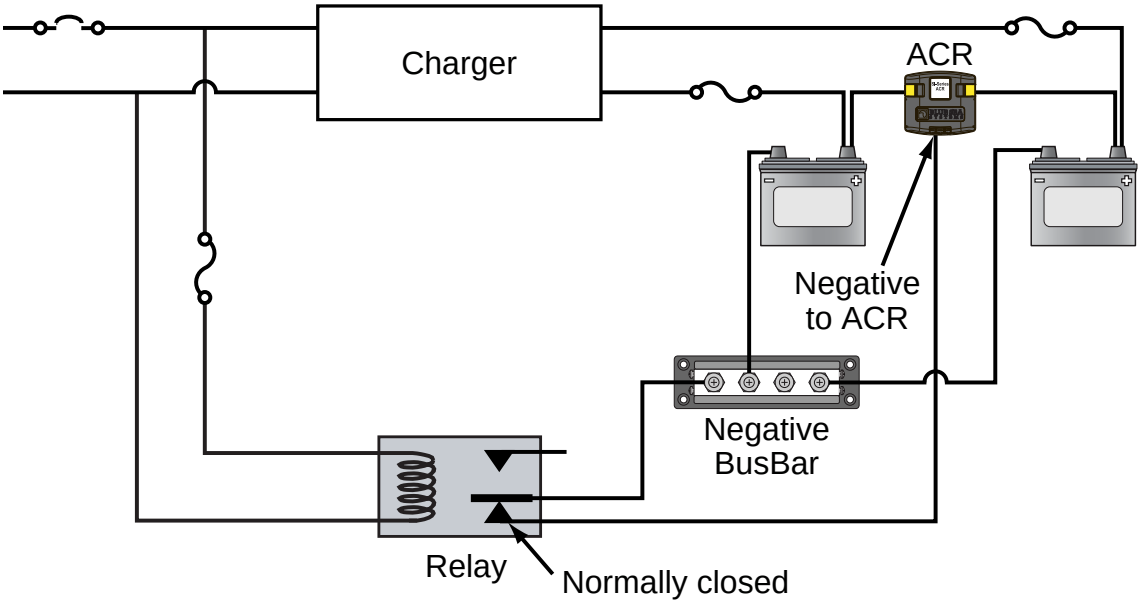

Automated ACR Disconnect