Application Briefs - Start Lockout for Two Engines

See Application Brief: Overcoming Dropout of House Electronics during Engine Starting for a brief explanation of Automatic Charging Relays (ACR) and description of Starting Isolation.

When starting engines, house and engine battery banks should be isolated to protect house circuits from starting transients. The new 120 Amp SI (Starting Isolation) ACR, part number 7610, from Blue Sea Systems is designed specifically to do so, as well as provide combining and normal isolation functions. Starting Isolation automatically isolates the house battery bank from the engine battery bank when the starting circuit is engaged.

When the start key switch is closed to start either engine, the signal to the starter solenoid is sent to the Starting Isolation circuit. This circuit opens the ACR before either starter is engaged.

With two engines, install a diode bridge to activate Starting Isolation from either start key switch. A diode bridge will accept a signal from either engine but keep the start signals isolated. A diode bridge looks like a diode isolator in reverse. Only two of the diodes in the bridge are used; the other two diodes can be ignored. Although only two of the diodes are used in this application, a diode bridge is inexpensive and provides a more convenient package. Fully molded diode bridges with terminations are more rugged and easier to work with than individual diodes. A diode bridge suitable for this application is GPB2504DI available from www.digikey.com, a mail order electronics distributor.

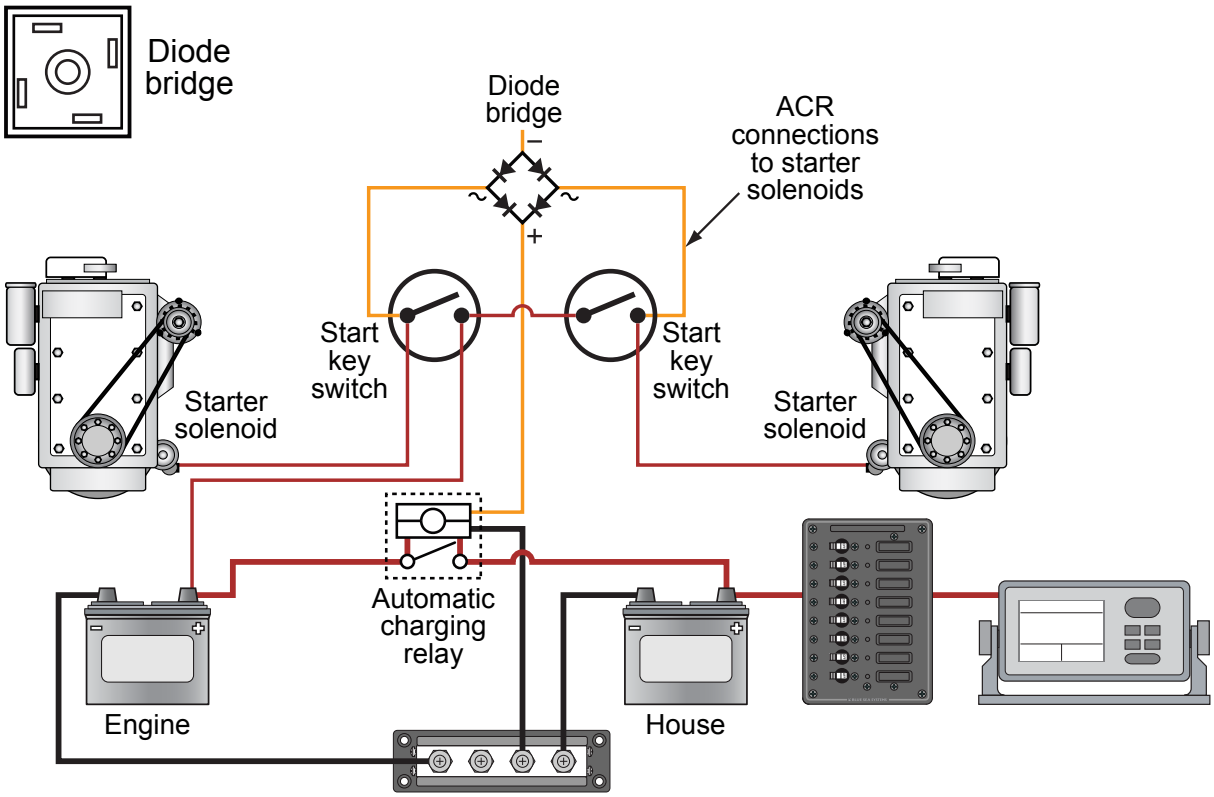

Typical Two Engine Installation